MASSC METAL ARTS
SOCIETY OF SOUTHERN CALIFORNIA

Sept/Oct 2010

It's Pewter Time!

Hand Fabrication and Casting

Lisa Slovis Mandel

November 13th & 14th

Location: Pasadena City College

$155. (includes $50 materials fee) MASSC members

$180. (includes $50 materials fee) non-members

MASSC members receive priority

Pewter, made up of antimony, copper and tin is one of the most mysterious of the non-ferrous metals. Due to its very low melting temperature and high malleability, it can be moved faster and in different ways than other metals. Because of its uniqueness, it is taught much less frequently in our metalsmithing community. In this workshop, you will learn how to use pewter's uniqueness to your advantage. You will form a beautiful contemporary pewter vase using forming, fusing, soldering and finishing techniques. For this particular project, we will not use hammers or stakes or a press. We will form the metal by hand, taking advantage of the easy malleability of the metal and the wonders of fusing to create a unique shape. Along with the vase, we will work on two smaller projects, including quick castings and a utensil. The castings will include several carving and molding techniques. Students will create as many things as time permits, but all will create several finished pieces. This is a fun, fast paced workshop that allows the student to make an impressive piece in a short amount of time.

Lisa Slovis Mandel is a nationally recognized metalsmith, jeweler, and teacher. She has exhibited in galleries, museums and at shows across the country, received a SNAG Educational Endowment Grant and several Niche Awards. Lisa teaches Metalsmithing and Design at a local community college along with teaching workshops at various locations. She received her BFA at the University of Wisconsin - Madison in 1995 and her MFA at San Diego State University in 1998. Lisa also just published her first book, Pewter Studio by Lark books in May 2010.

The workshop will be filled using a lottery system. To put your name into the lottery, email artizen7@gmail.com or call Randi at 310/831-2117 between 9 a.m. and 9 p.m. The lottery will open on Saturday, September 11th and close on Saturday, October 2nd. The results will be sent out on October 3rd.

What Did the Well-Dressed Neanderthal Wear? Jewelry

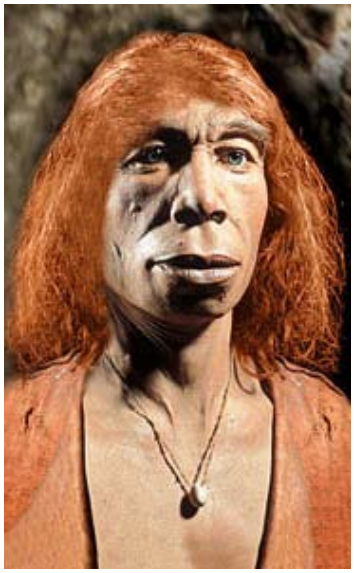

Artifacts from the Cueva de los Aviones and Cueva Antón sites in Spain. João Zilhão of the University of Bristol, along with several colleagues, has uncovered Neanderthal jewelry from two caves in southern Spain dating to about 50,000 years ago. "This," says Zilhão, "is 10,000 years before modern humans arrived. There is no question that Neanderthals are their makers."

The objects in question consist mostly of seashells, many of them pierced, with bits of pigment on them. The new discovery is just one more important piece in the puzzle that says Neanderthals may have looked different, but behaviorally, cognitively and socially, they were not all that different from us. That includes their taste for a little bit of bling.

MASSC Video Library Now Available on DVD

The MASSC video library currently has 18 videos on DVD of past workshops that members can check out. These DVDs are direct videotapes of actual workshops and have not been edited. Watching a MASSC workshop video is akin to being there in person.

Workshop Videos Include:

Alison Antleman - Custom Clasps

Belle Brooke Barer - Sculptural Hollow Ring

Diane Falkenhagen - Mixed Media Techniques for Jewelry

Leslee Frumin - Classy Clasps

Mary Lee Hu - Weaving and Chains

Charles Lewton Brain - Fold Folding

Betsy Manheim - Fold Forming

Trish McAleer - Metal Corrugation

Bruce Metcalf - Jewelry Alternatives

Ben Neubauer - Wire Fabrication

Harold O' Connor - Surface Embellishments & Efficient Workshop Methods

Katherine Palochak - Tufa Casting

2Roses - Metal Patination

Carol Sivets - Metal Reticulation

Lisa Slovis Mandel - Hydraulic Press

Carl Stanley - Cuff Bracelet

Pauline Warg - Metal Beads

Wayne Werner - Stone Setting

A $20 donation is necessary to check out each DVD. This includes the use of the DVD plus 2-way shipping. There is no additional security deposit. Members can keep each DVD for up to 30 days. Videos can be checked out on the MASSC website at www.massconline.com. Click the "Video Library" link on the home page.

MASSC Board of Directors

President	**Ketarah Shaffer**
949 -643 -9693	ketarah@earthlink.net
Program Chair	**Randi Newbill**
	artizen7@gmail.com
Recording Secy	**Dianne Ravin**
949-854-8004	dianneravin@cox.net
Corresp. Secy	**Trinh MacDonald**
909-559-7008	twmacdonald@yahoo.com
Treasurer	**La Verne Christenson**
714-531-4041	laverne@socal.rr.com
Marketing	**John Rose**
714-778-5336	john@2Roses.com
Membership	**Diane Weimer**
562-596-5841	diaweimer@verizon.net
San Diego Rep	**Carol Sivets**
619-281-6447	ladysmith@fastmail.fm
Santa Barbara Rep	**Janice Lorber**
805-963-5693	jylorber@cox.net
Hospitality Chair	**Doreen Endo**
Videographers	**Nancy Monkman**
	Pat Wierman
Video Archives	**Nancy Jo Stroud**
	uniquesbynj@cox.net
Newsletter Guy	**Duke Sprue**
	DukeSprue@massconline.com
Webmaster	**Corliss Rose**
714-778-5336	corliss@2Roses.com
Yahoo Group	**Ketarah Shaffer**
949-643-9693	ketarah@earthlink.net
Board Members at Large	
Trish McAleer	tmcaleer@att.net
Corliss Rose	corliss@2Roses.com
Pat Wierman	goddesswoman@hotmail.com

MASSC web site: www.massconline.com
MASSC Newsgroup:
MetalArtsSociety-subscribe@yahoogroups.com

MASSC serves the needs and interests of artists working in metals and provides an environment for the exchange of information, instructional workshops, demonstrations, lectures, and panel discussions. Annual dues Sept 1-Aug 31); Regular Member, $30; Family, $45; Full-time Student $20. Please add $5 to your annual dues if you would like to receive a printed copy of the MASSC newsletter. All others will receive the newsletter via email. Membership forms are available at www.MASSConline.com

TIPS & TRICKS

by John Rose, of 2Roses

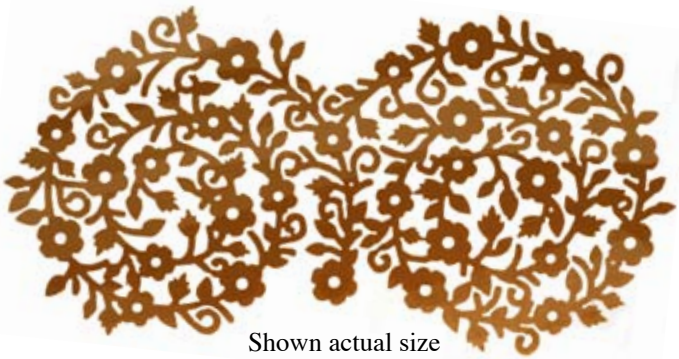

Flower Brooch by 2Roses

Shown actual size

Hi-Tech Lo-Cost Metal Smithing

Most of us have heard about industrial metal working techniques such as water jets and lasers. The speed and accuracy is well documented, but until recently these methods were out of reach to the studio metal artist. Two companies are changing all that. The item at the top of this collumn was cut in 18 ga. copper by Metal Products Engineering in Los Angeles (www.metalproductseng.com). The company specializes in working with artists and doing one-offs and low volume runs. They offer a wide range of surprisingly low cost metal stamping, cutting and forming services The pendant below was produced using new laser-cut paper rolling mill pattern from Rolling Mill Resource. (http://www.etsy.com/shop/rollingmillresource) This innovative new service sells custom or stock patterns for just a few dollars. Add a little technology to your technique and watch the creative sparks fly.

Old School Nautilus by 2Roses

Fold Forming Workshop with Betsy Manheimer

Written by Sandra VanderMey

Fold forming is a process originally developed by Charles Lewton-Brain. From a few basic folds Brain developed hundreds of more complex folds, offering endless creative applications for the metalsmith. Most techniques can be done in less than five minutes. Another outstanding quality is that fold forming works with all metals, including gold alloys, platinum, palladium and even niobium and tantalum. The four basic steps, folding the metal, tightening the metal, annealing and then unfolding the metal, result in forms applicable for jewelry, relief wall work, metal sculpture, vessels and hollowware. In these procedures, forming, forging and chasing often go together with folding to compliment or enhance each other.

Most metalsmiths already have the tools needed for fold forming in their studio. You do not need all of these items to experiment with fold forming. Only a few basic tools in this list are enough to give you a rich and inspiring experience.

Tools

T stakes and mushroom stakes, Vise, Rolling mill, Bench block, Bench knife or screw driver with end rounded, filed and sanded, Bench shears, Hand shears, Hammers: goldsmith, ball peen, riveting, raising, forging, chasing, forming, planishing hammers, Pliers: chain nose, flat nose, glass bead making pliers and round nose pliers Mallets: small rawhide or plastic mallets, Additional items: tube wringer, dapping punches, decorative stamps, separating discs with mandrels, brass or steel wire pieces 16 to 22 gauge, various wooden dowels filed and sanded into points, paper towels

Larger hammers should be reserved for thicker gauge metals while smaller hammers work best for thinner gauge metal and fine detail.

Metals

Begin with light gauge metal. Copper is best but fine silver will also work. From two 6" x 12", 28 gauge to 32 gauge copper sheets cut several pieces 2" x 2" and a few pieces 1" x 6" for practice. After working with thinner gauges you can use heavier gauges and experiment with other metals like brass, gold, steel or other alloys. You may choose to use these practice pieces as a creative starting point to be used alone or combined with other metals and techniques in future work. It's important before you begin to protect your eyes with goggles or safety glasses. You may also choose to wear ear protection as this can be a noisy process!

Anatomy of a Fold

Where the metal is bent is the folded edge or closed side of fold. The open ends are called the legs. There are a number of distinct categories in fold forming. They include line folds, cross folds, rolled folds, pleated folds, form and shear folds and hydraulic press folds. I will discuss a few that Betsy Manheimer included in her workshop.

LINE FOLDS

Simple Line Fold

Hand fold a 2" x 2" or 1" x 6" piece of copper in half with legs meeting together. Laying the metal piece on a folded paper towel on a bench block, pound the fold with a mallet. Note: The process of pounding on the fold to accentuate or tighten it is referred to as "con-

firming". Anneal and open up the fold. Confirm again with a planishing hammer to crisp the fold.

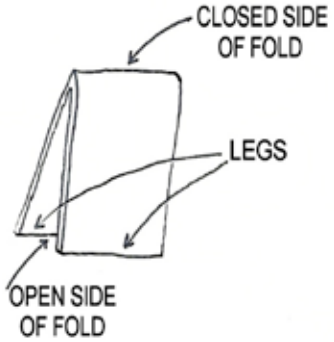

When you tighten the fold, giving it a crisp appearance, the metal can appear as if a square wire has been soldered to the sheet.

Reflected Line Fold
Fold a 2" x 2" piece of copper in half. Confirm the fold as in the simple line fold but instead of opening up the fold, fold again so sheet is in quarters. Confirm again with a mallet. Anneal the piece and open it. Flatten again with a mallet. This will create three raised lines and one recessed line on the metal. By repeating this process you can make some lines appear as if they are running underneath other lines.

Partial Line and Forged Fold
Hand fold a piece of 2" x 2" copper in half. Mallet the fold, confirming it. Texture only part of the fold by forging it with a forging hammer or tighten only part of the fold using a smooth, oval rounded hammer. Anneal the piece and open it with pliers or wooden dowels sanded into points for this purpose. Smooth out areas not forged with a mallet to give the appearance of a "floating" fold that stands up.

Forged Line Fold
Use thicker gauge metal for this technique. Bend a 1" x 6" strip in half length wise. Confirm with a mallet on a bench block. Go over entire fold with a goldsmith or forging hammer creating lines across the fold while pounding near the edge of the anvil. Flip the piece over and repeat forging another complete course on the other side of the fold, end to end. A curvature will begin as fold expands perpendicular to the hammer blows. Anneal and open the fold. This is an excellent way to create a bracelet because of the natural curve the metal takes while forging. The length of the leg determines the curvature.

Variation: The open ends can also be forged with a simple fold in between. The open ends of the metal piece can be made to appear leafy with repeated forging. Anneal frequently and thicken the edges when you have completed the piece.

T-FOLDS
T-fold
Fold a 1"x 6 " piece of metal loosely in half (width-wise). Put the legs in a vice exposing an open loop on the top. Mallet down just the ends, confirming it, creating a pillow form. Continue flattening with a mallet to form a T shape in the vise. The top of the T should spread evenly over both sides of the vise. Anneal and open up the fold with pliers and your hands. Create different effects by using a stamp or tool inside of the opened fold.

Forged T-fold
The T-fold can be forged to widen the " table" or the top surface of the T or forged lengthwise with the legs free from the vise to form a helix or twist. Anneal and open or leave flat.

Chased T-Fold
Fold a 2" x 2" piece of metal in half with hands. Put the legs in a vise leaving a open loop at the top Mallet down just the ends of the loop forming a pillow which you will chase into. Begin chasing the pillow with small hammers first for broad and more efficient shaping followed by dapping tools. Work sideways to prevent collapsing as well as from the top, stopping to check the resulting indentations. You can push the metal in this way a great deal. Anneal the entire piece carefully and continue to thin and expand the metal even more with this method. Anneal and unfold the metal with your hands exposing the beautiful textures you have created on the back and the front.

Wedge T-fold
Fold a 2' x 2" square piece of metal loosely in half. Place the open ends or legs in a vise on an angle, leaving an open loop on the top. It should look like an open cone when you tighten the vise around the ends. Pound the wedge flat with a mallet. Anneal and open with pliers or hands. Like the t-fold additional patterns can be made on the inside after it is opened.

continued on page 6

OTHER FOLDS
The following two folds are probably the most exciting of all the folding techniques Betsy Manheimer demonstrated.

Star Fold
Using a 2" x 2" piece of metal fold in half on the diagonal, corner to corner. Confirm with a mallet on an anvil, but not too tightly. Fold piece again bringing the two pointed corners together so you have a V shape. This crease can be easily done using the edge of an anvil. Confirm folds again, not too tightly. Anneal the piece and open the folds with fingers. Carefully pinch each section creating four separate hollow "petals". Sink your piece with the closed end down into softened non-hardening clay which has been firmly stuck to your work bench. Modeling clay is a brilliant alternative to pitch.
Use punches, chasing tools and small hammers to further open the folds. Spread out the inside of each of the four hollow spaces creating a four pointed star like shape. Additional chasing and repousse can be done using this technique. There are many variations on this form.

Heistad Cup
This technique uses rolled folds and requires the rolling mill for equal directional pressure on the metal. In his Ganoskin project paper Charles Lewton-Brain named this fold after Earling Heistad "… who made the mental jump to this shape in an early workshop in 1985 in New Hampshire." It's insightful that Charles thought of this as a truly magic fold and used it to inspire beginning metal students by introducing it as their initial experience with jewelry making.
It may be better to use a thicker gauge metal, like 22 gauge, as it requires a lot of stretching to reach the desired shape. Using a 2" x 2" metal square fold in half diagonally like the Star Fold. Pinch the ends

matching them together and clamp with a pliers to get a crisp fold. Confirm the fold with a mallet on the anvil. Fold again similar to the Folded Star so metal is folded into quarters clamping again, producing a wide V shape. Confirm again with a mallet on an anvil. Put the piece through the rolling mill using a dead pass without pressure the first time. Anneal the piece and put through the rolling mill again with the pointed end first and open ends last. This will stretch the metal properly. Do this several times, annealing in between until the piece reaches double to triple the length it was when you started. You will need to measure the metal after each pass through the rolling mill. When the desired length is reached, thoroughly anneal and open carefully with your fingers. Avoid using tools as much as possible to open it as they may mare the surface. The piece will look like a trumpet flower when opened. Instead of pinching off four units as in the Star Fold, the entire piece is opened up forming one large horn like opening. Like the Star Fold, finishing this piece requires sinking it into soft clay with the bottom point down. With dapping tools or wooden dowels that have been rounded and sanded, work into the shape sculpting it into an open form with four accentuated vertical liner edges. This gorgeous shape can be used alone or with further chasing or piercing perhaps as a detail in a larger piece. You can manipulate the shape further, using your hands to create more pronounced petals and flowing curves. By soldering a pin attachment on the back you can produce a spectacular brooch or imagine this shape on a smaller scale for earrings. As with all the folds described here heat coloration from annealing on most metals makes a lovely natural patina!

WEB WATCH

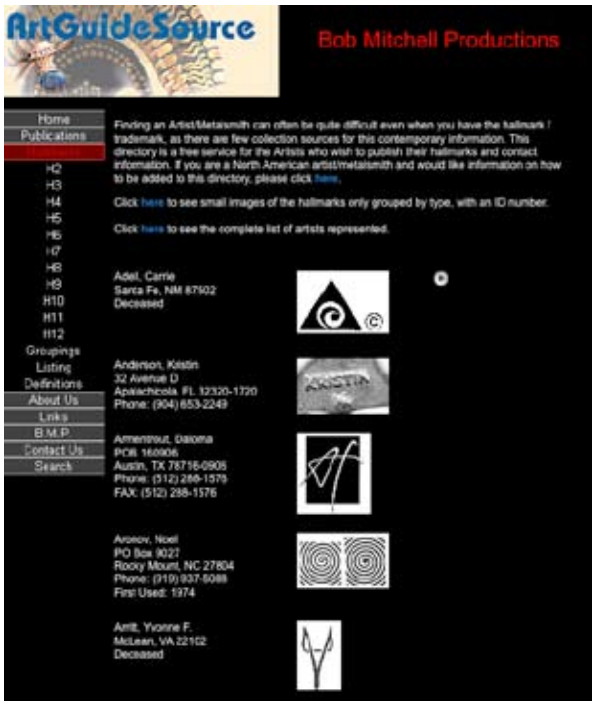

http://artguidesource.com/
Directory of American Hallmarks. Get yours listed FREE. Bob Mitchell has been running this directory for years as a public service to the metals community and the collector/museum world. Stake your place on the directory of American metalsmiths.

Honestly, how many MP3 players can be as subtle and discreet as this! Fashion statement, jewelry, bling…you name it, and it's there! I adore the little loop earring that goes into the ear as headphones.

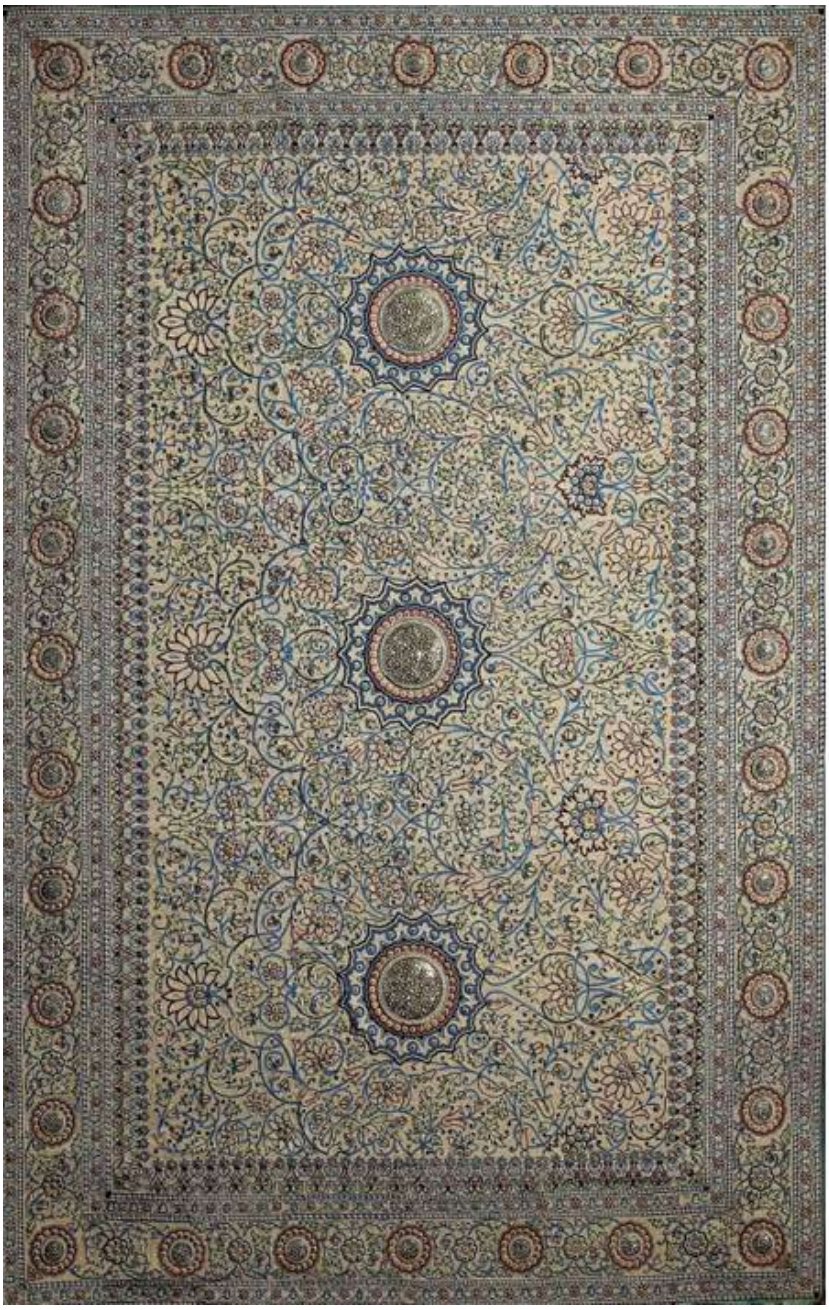

The Pearl Carpet of Baroda
One of the most extraordinary masterpieces of its kind ever to be made. The carpet is believed to have been created for the tomb of the Prophet Mohammad and was commissioned by the Maharaja of Baroda. The carpet has a surface that is entirely embellished, with an estimated two million natural seed pearls, known as "Basra" pearls originally collected in the waters of the Gulf. The design is richly encrusted and embellished with gold set diamonds and precious stones in the hundreds.

Member News

Ruth Shapiro, who specializes in handcrafted Judaica, will be appearing at the Santa Monica Contemporary Craft Market, Nov 6-8th 2010.

MASSC's Demo Day paid dividends for Khobe DeLucca who won an Idyllwild Art Satchel and Deb Ferguson who won a rectifier from Otto Frei

Diane Weimer has two pieces in the new Lark Books 500 Gemstones.

MASSC METAL ARTS
SOCIETY OF SOUTHERN CALIFORNIA

6285 E. Spring St. #508, Long Beach, CA 90808

Upcoming Events

Dave Jones

Hand Engraving on Metal

Beginning and Intermediate

September 25th and 26th

Location: El Camino College

Did you change your address or email? Don't miss your MASSC newsletter and workshop announcements. Send changes to Diane Weimer diaweimer@verizon.net